POKHARA UNIVERSITY

Level: Bachelor Semester: Fall Year : 2022
Programme: BE Full Marks: 100
Course: Basic Engineering Drawing Pass Marks: 45
Time : 3hrs.

Candidates are required to give their answers in their own words as far as practicable.

The figures in the margin indicate full marks.

Attempt all the questions.

1. Draw a helix for one convolution on a cylinder of 50 mm diameter and 100 mm pitch. 20

OR

Draw an external common tangents between two different circles of diameter 70mm and 40mm respectively, where center to center distance is 80mm.

2. Make a complete orthographic drawing and dimension it. 35

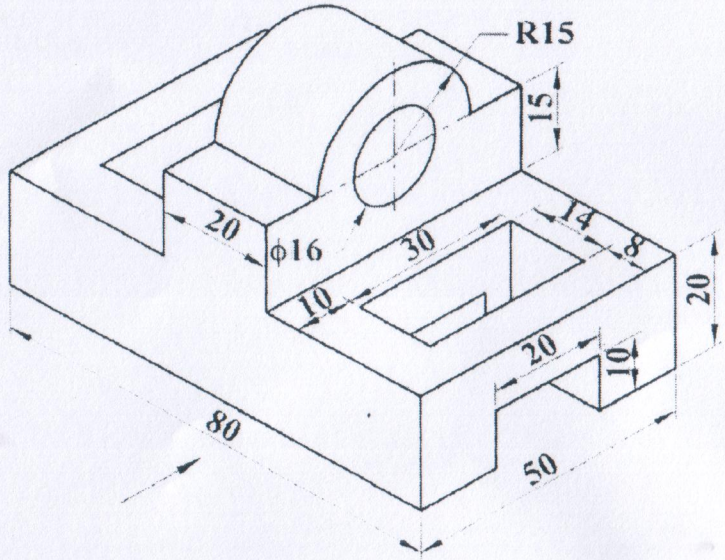

3. Make a complete orthographic drawing of a geometrical solid cut by a plane figure as shown below. Find the true shape of the section. Construct the development of the surface of the solid 15

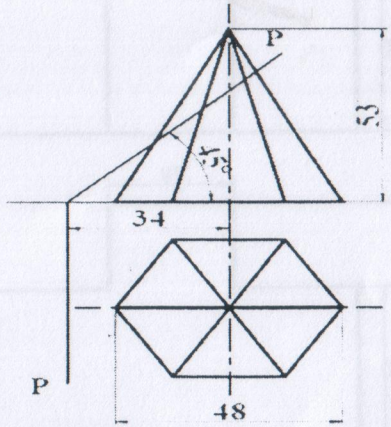

4. Draw the isometric drawing of the following orthographic drawings. 20

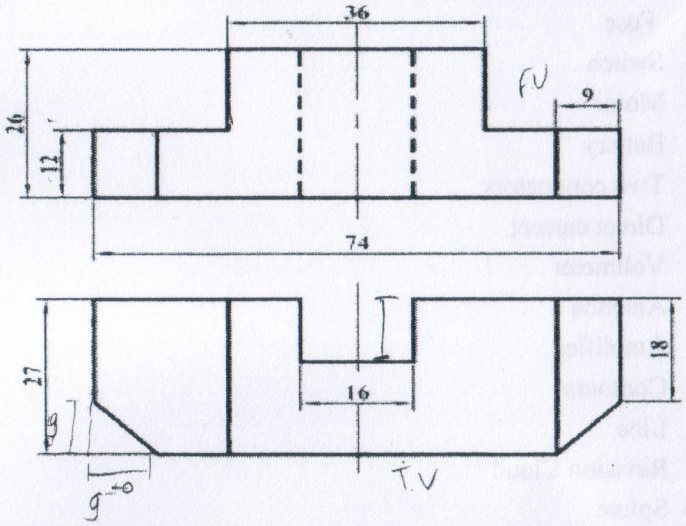

OR

Draw parallel perspective view from given orthographic views.

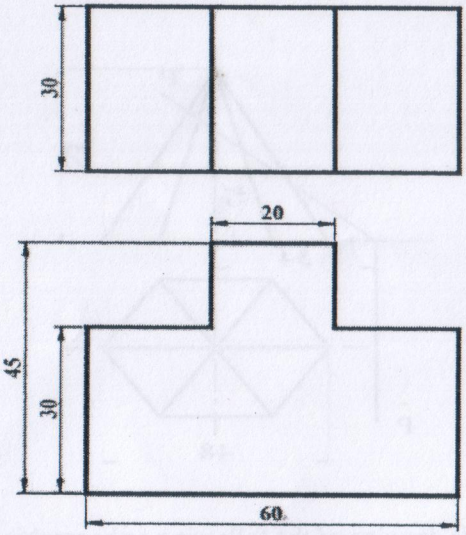

5. Draw the symbols of the following objects. (**Any Ten**) 10

a) Fuse
b) Switch
c) Motor
d) Battery
e) Two conductors
f) Direct current
g) Voltmeter
h) Antenna
i) Amplifier
j) Contours
k) Line
l) Revision Cloud
m) Spline
n) Ellipse
o) Bell